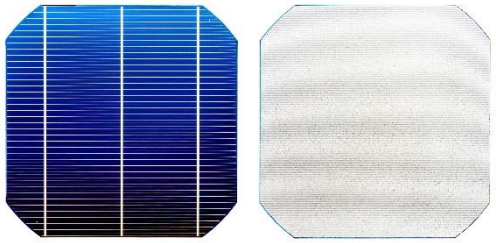

Wykład 8
16.06.2025 r.
Model dwudiodowy ogniwa słonecznego

Katarzyna Gwóźdź

Charakterystyka I-V

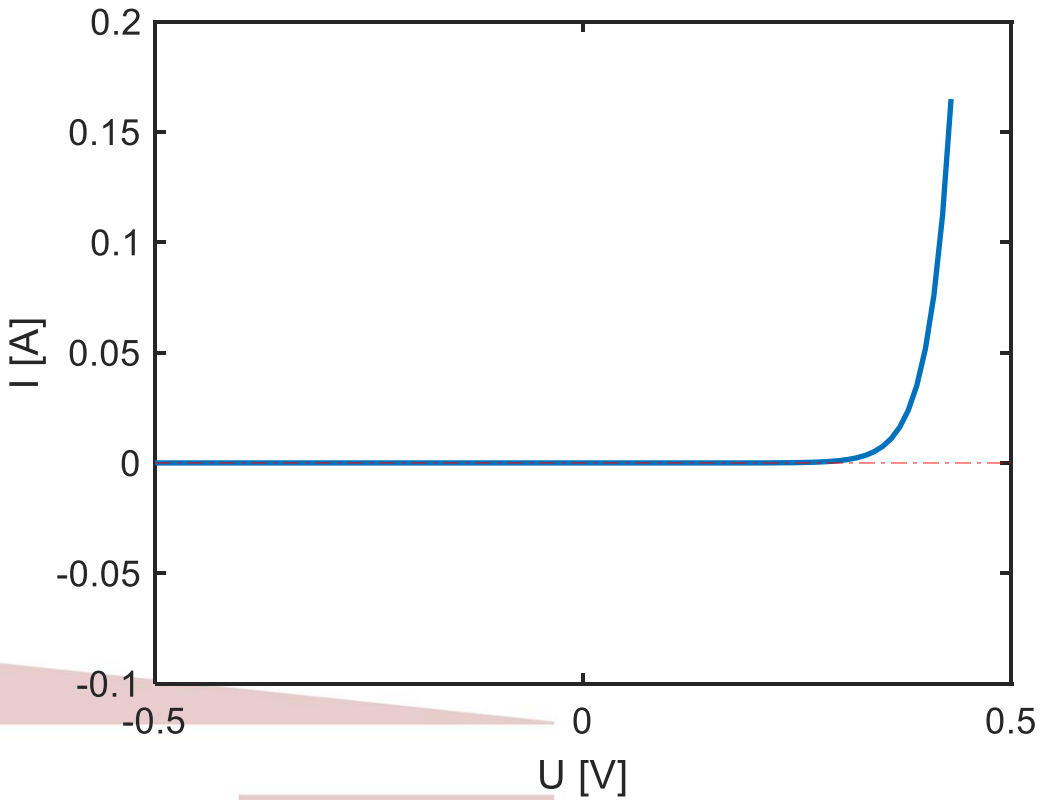

$$I = \mathrm{I}_0 \left[\exp\left(\frac{qU}{nkT} \right) - 1 \right]$$

Charakterystyka I-V

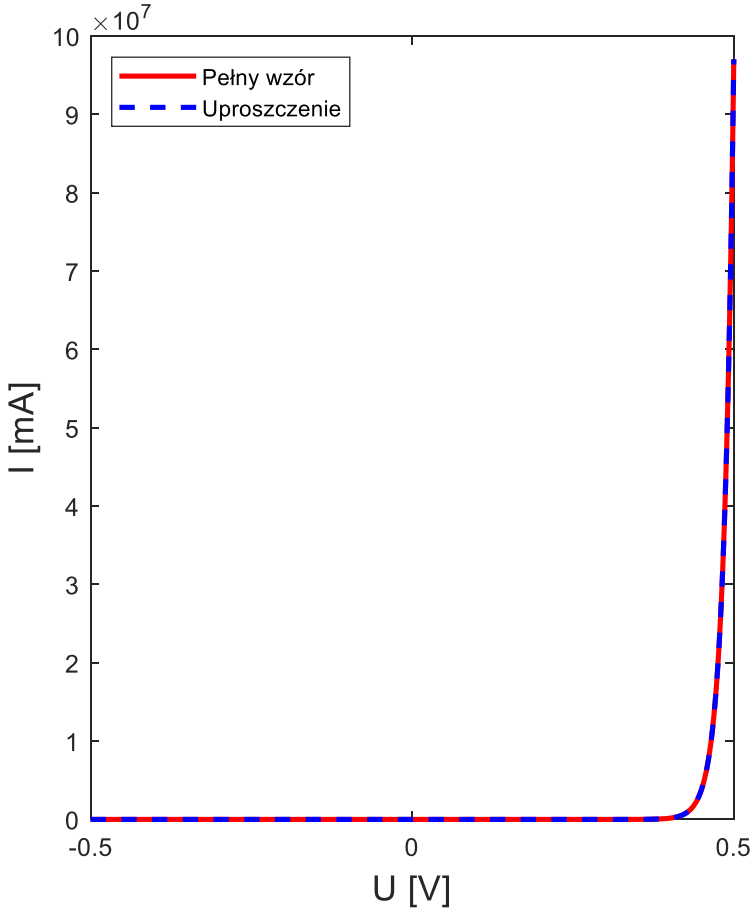

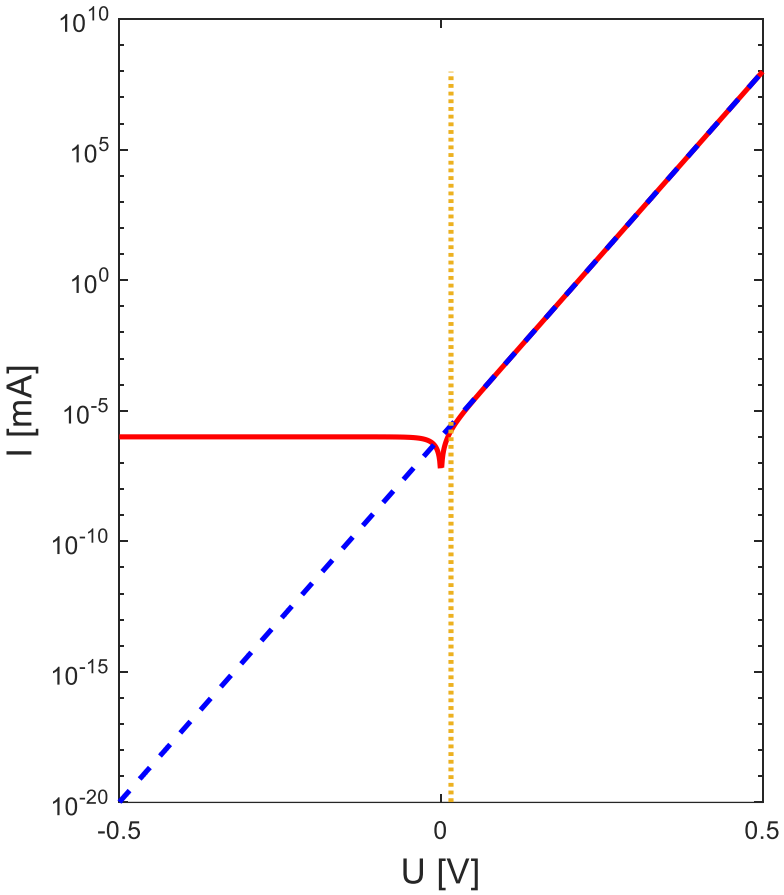

Charakterystyka I-V

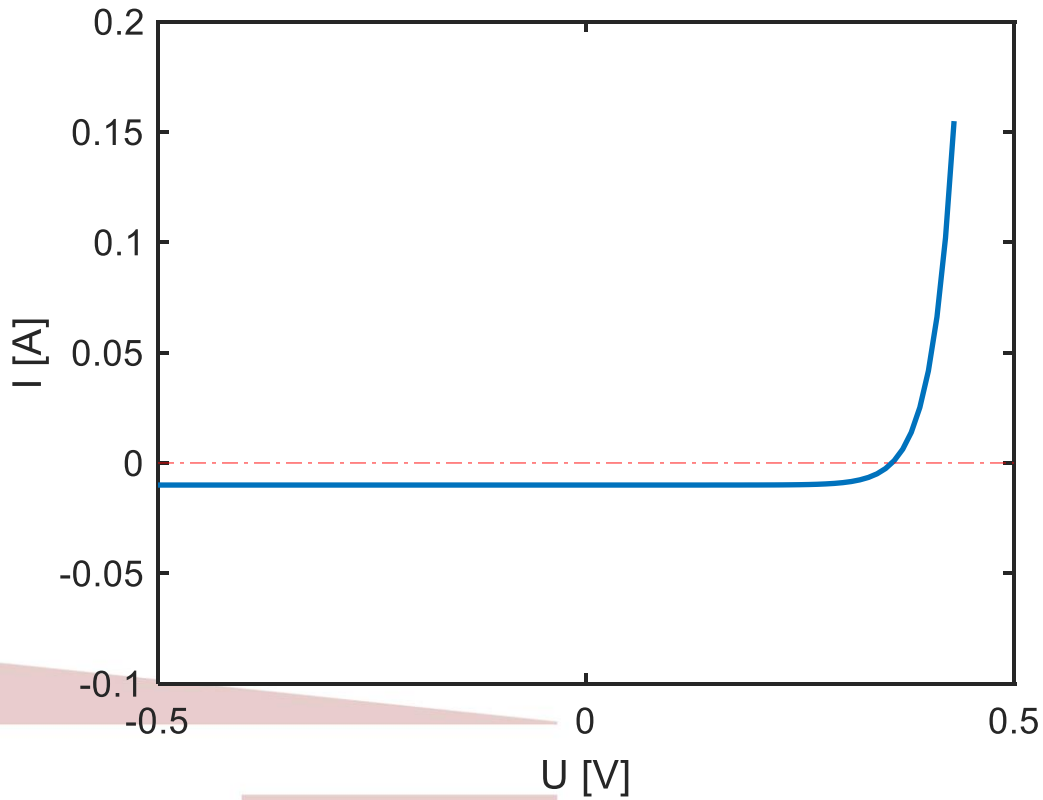

$$I = \mathrm{I_0}\left[\exp\left(\frac{qU}{nkT}\right)\right] - \mathrm{I_L}$$

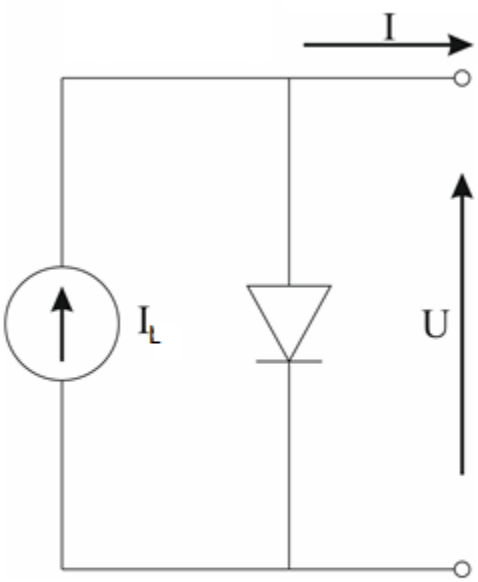

Charakterystyka I-V

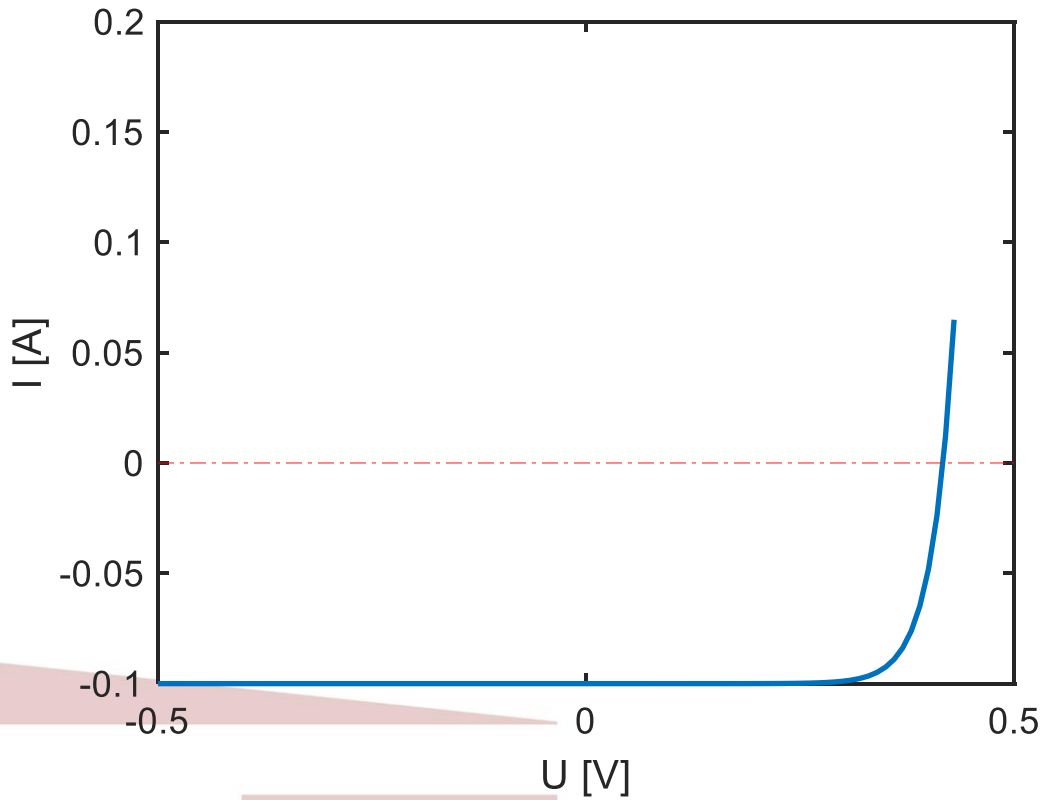

$$I = \mathrm{I_0}\left[\exp\left(\frac{qU}{nkT}\right)\right] - \mathrm{I_L}$$

Charakterystyka I-V

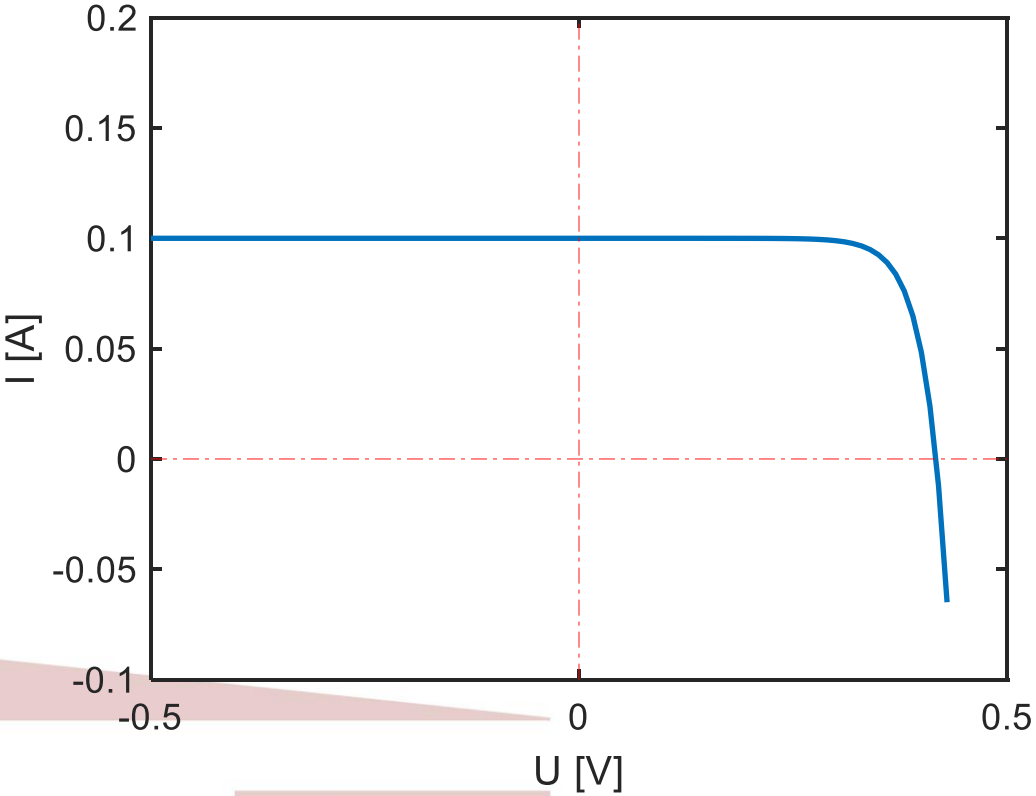

$$I = \mathrm{I_L} - \mathrm{I_0}\left[\exp\left(\frac{qU}{nkT}\right)\right]$$

Charakterystyka I-V

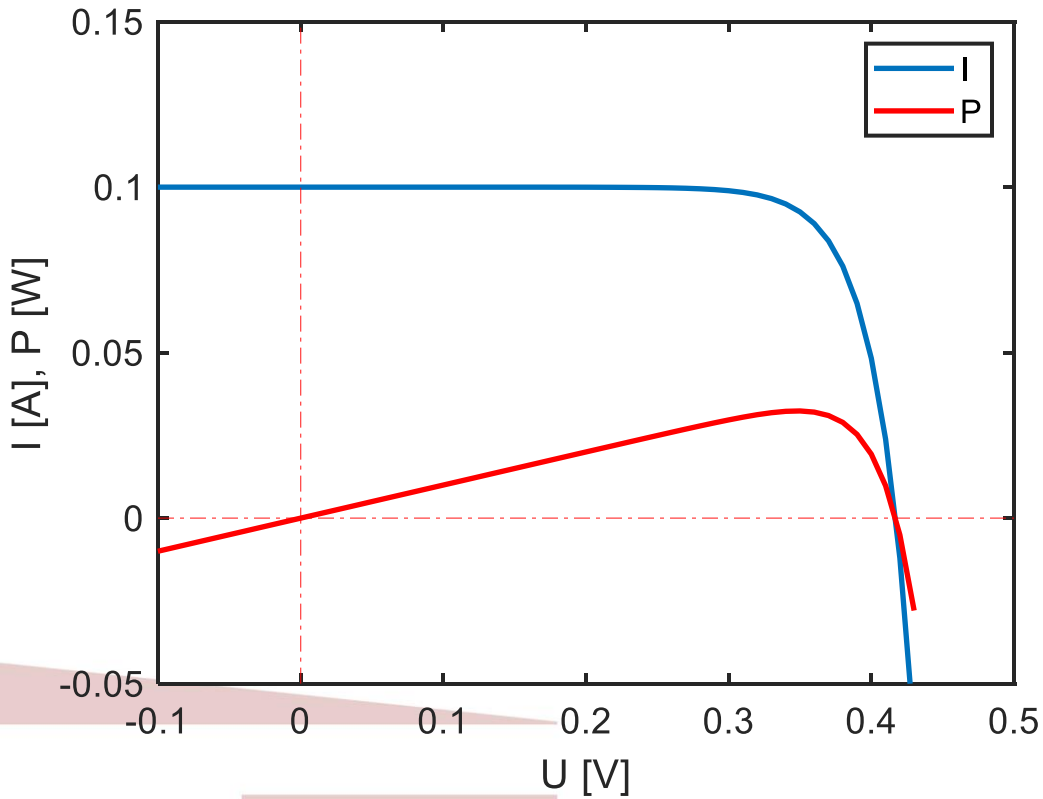

$$FF = \frac{U_{max} * I_{max}}{V_{oc} * I_{sc}}$$

$$\eta = \frac{P_{max}}{P_{in}} = \frac{FF * V_{oc} * I_{sc}}{P_{in}}$$

Oporność szeregowa

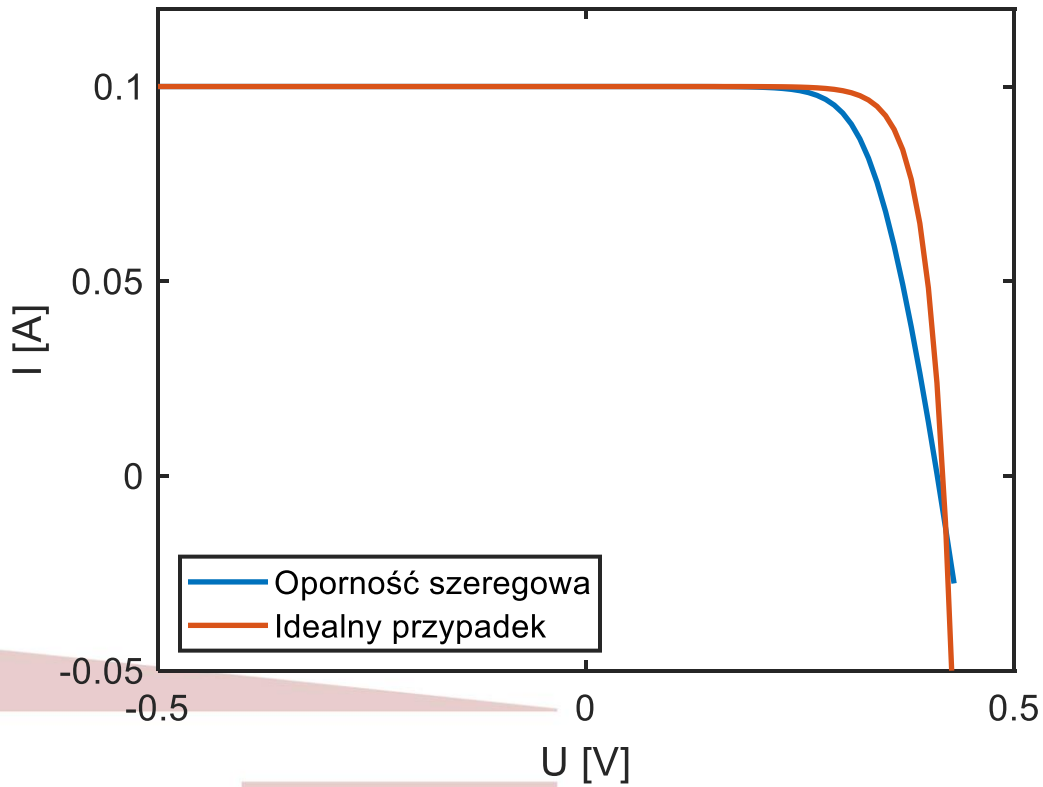

$$I = \mathrm{I_L} - \mathrm{I_0}\left[\exp\left(\frac{q(U + IR_S)}{nkT}\right)\right]$$

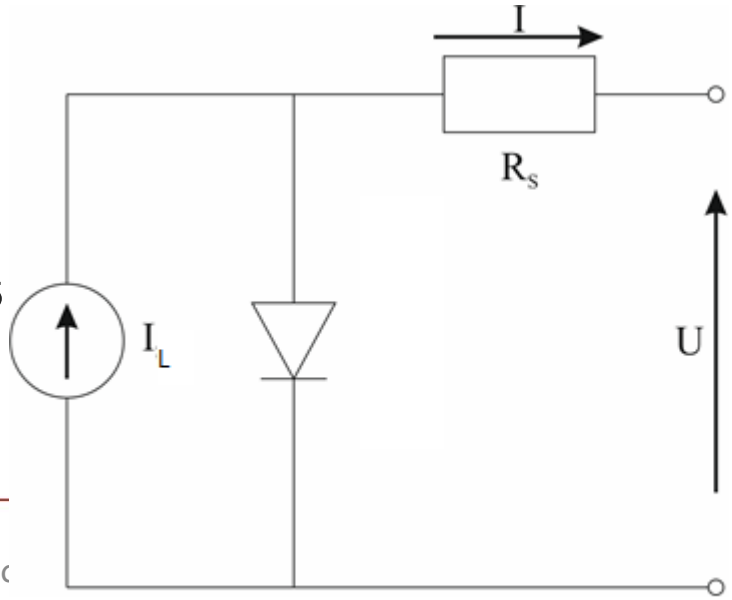

Oporność upływu

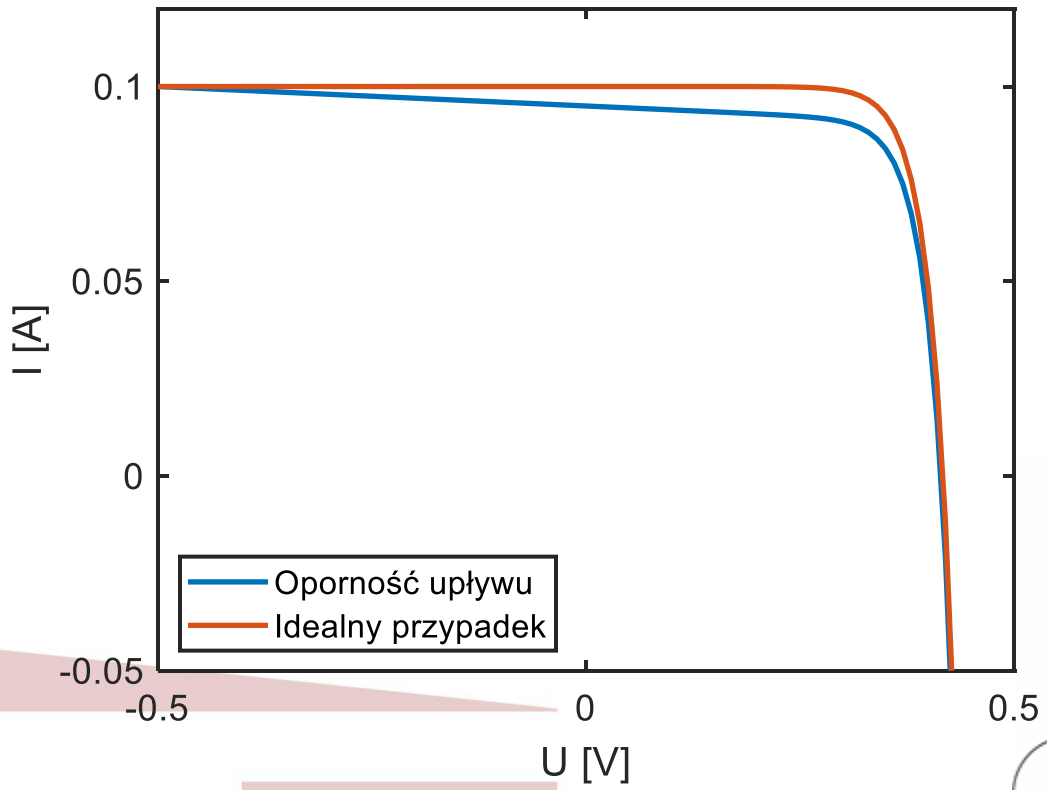

$$I = \mathrm{I_L} - \mathrm{I_0}\left[\exp\left(\frac{qU}{nkT}\right)\right] - \frac{U}{R_{sh}}$$

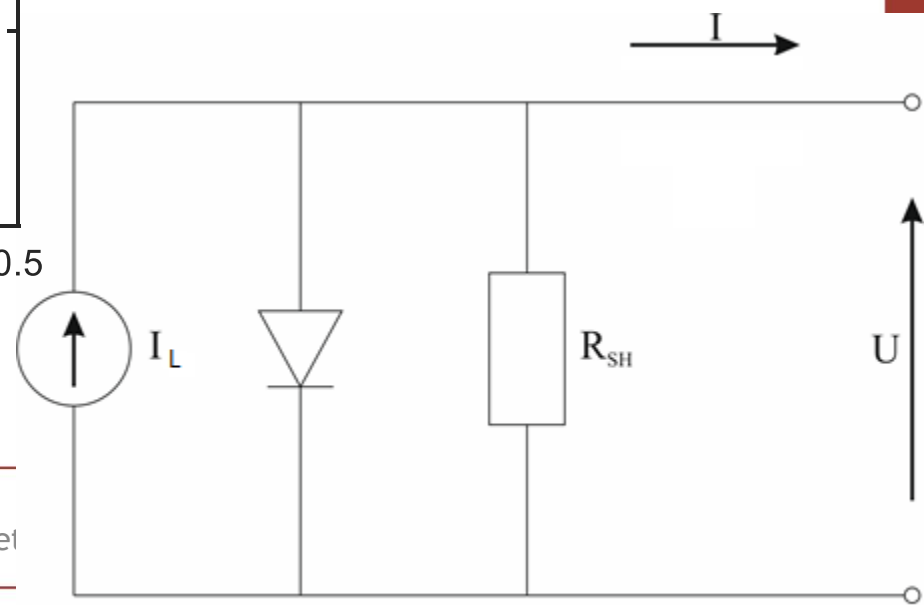

Model jednodiodowy

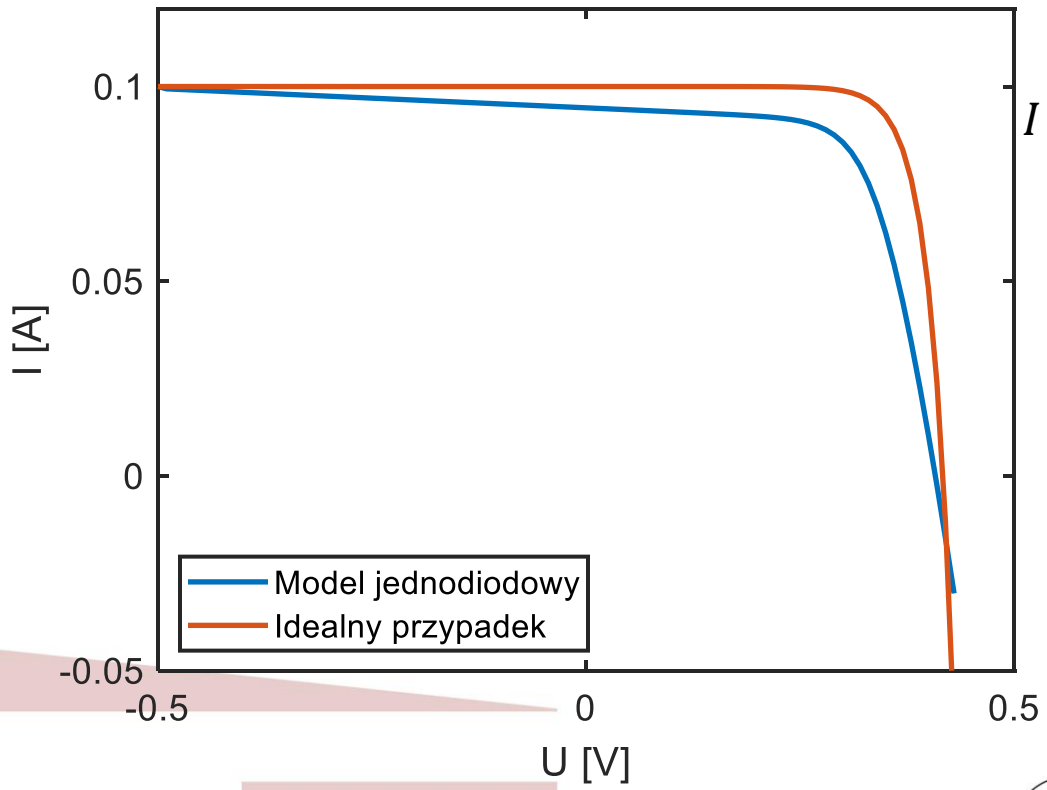

$$I = \mathrm{I_L} - \mathrm{I_0}\left[\exp\left(\frac{q(U + IR_s)}{kT}\right)\right] - \frac{U + IR_s}{R_{sh}}$$

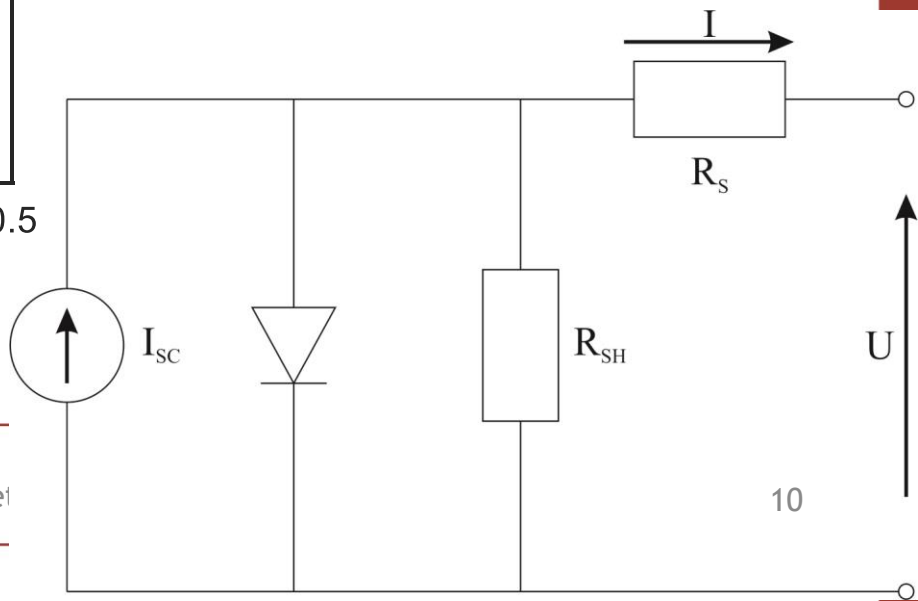

Model dwudiodowy

$$I = \mathrm{I_L} - \mathrm{I_{01}}\left[\exp\left(\frac{q(U+IR_s)}{kT}\right)\right] - \mathrm{I_{02}}\left[\exp\left(\frac{q(U+IR_s)}{2kT}\right)\right] - \frac{U+IR_s}{R_{sh}}$$

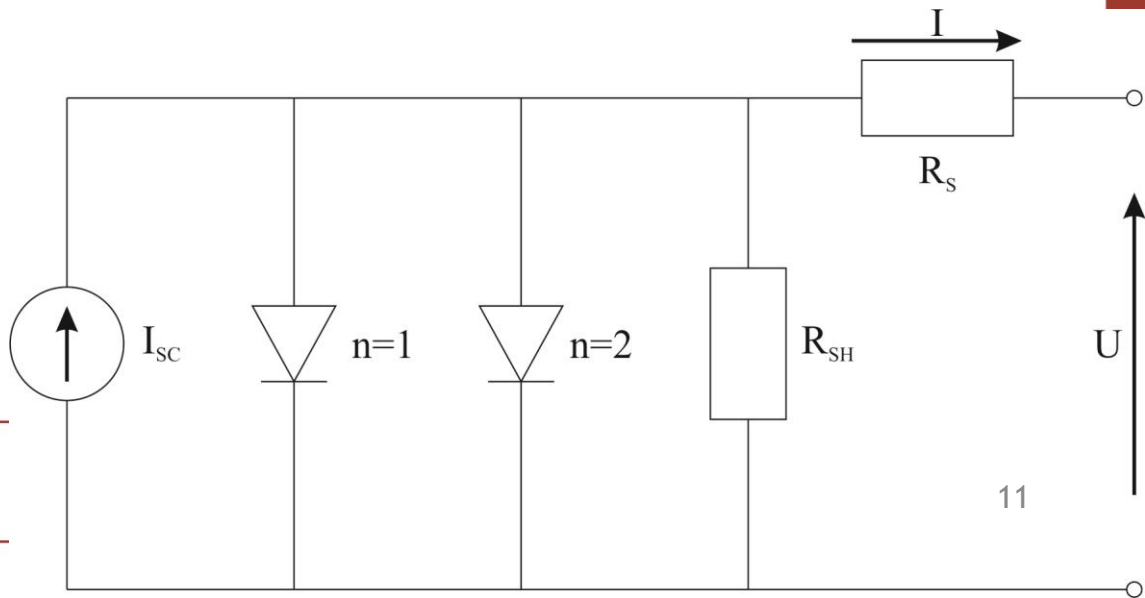

Politechnika Wrocławska

Model dwudiodowy

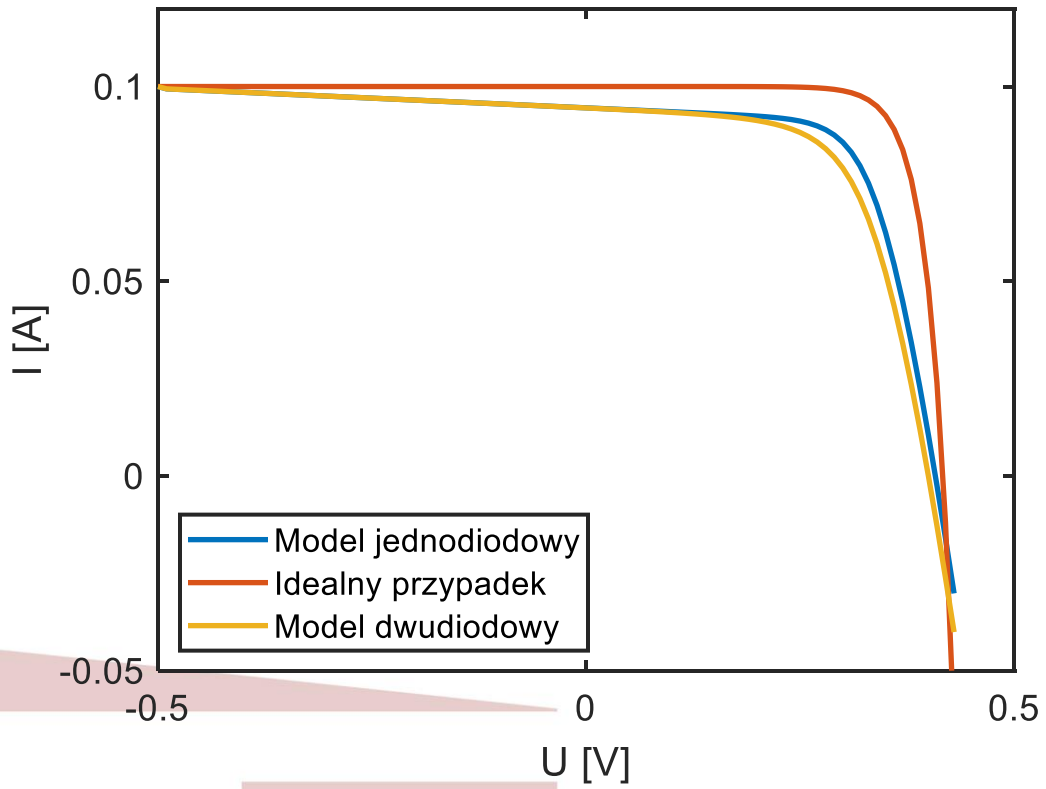

Eksperyment

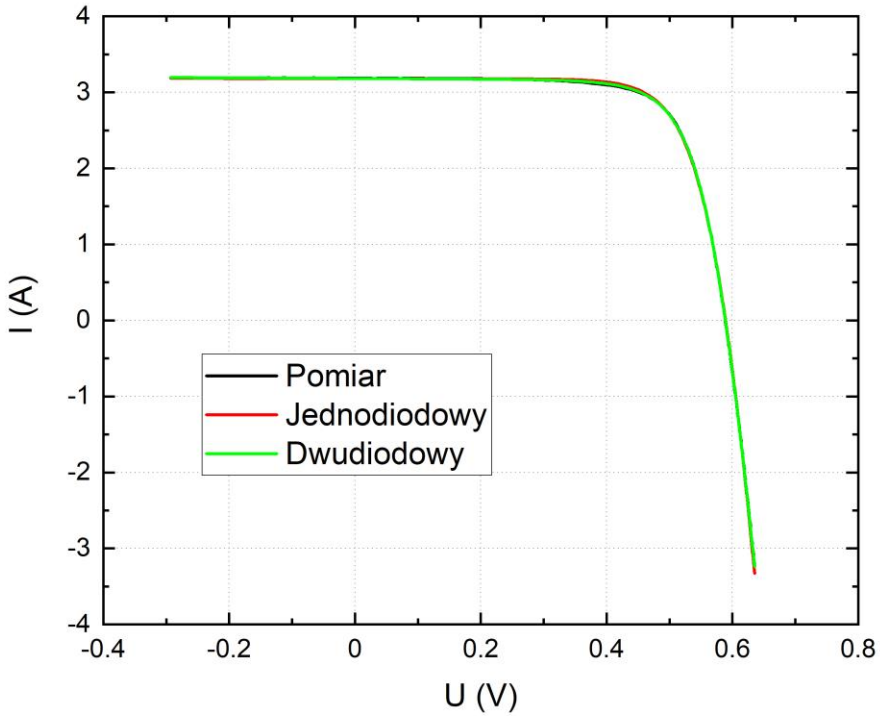

Parametr	SDM	DDM
I_{ph} (mA)	3181.27	3183.85
R_s (mOhm)	5.41202	7.56196
R_{sh} (kOhm)	71.4466	25.6086
I_{01} (A)	9.31529e-07	2.10883e-10
I_{02} (A)		1.30949e-05

Eksperyment

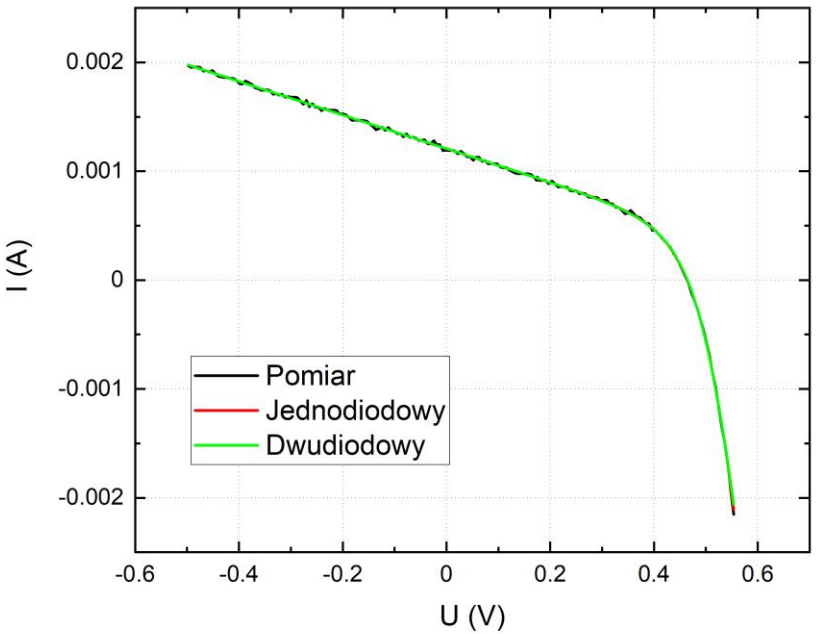

Parametr	SDM	DDM
I_{ph} (mA)	1.22436	1.23803
R_s (Ohm)	9.07792	15.7478
R_{sh} (Ohm)	637.392	631.917
I_{01} (A)	1.18751e-08	2.2005e-12
I_{02} (A)		4.06468e-08

Eksperyment

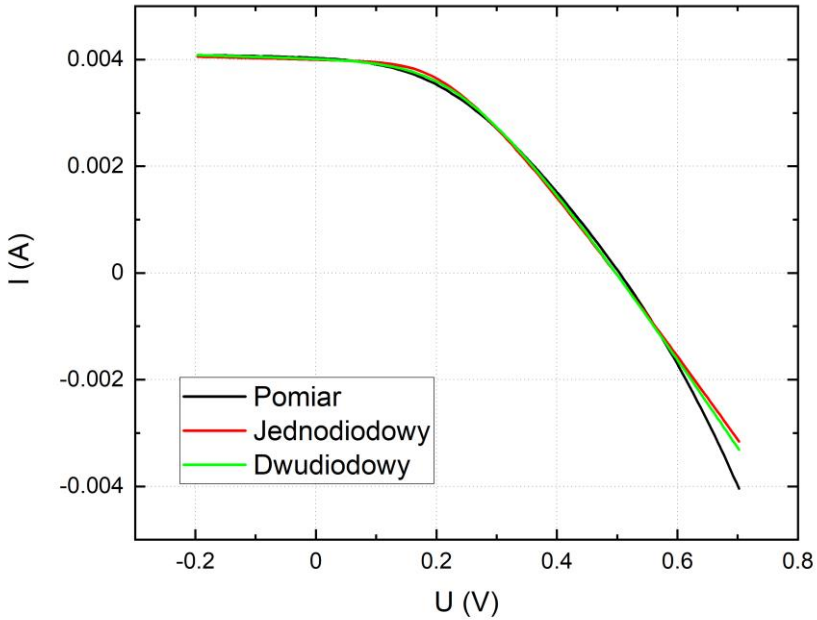

Parametr	SDM	DDM
I_{ph} (mA)	4.06909	4.09351
R_s (kOhm)	58.9336	55.2913
R_{sh} (kOhm)	3.42349	3.09723
I_{01} (A)	6.69527e-10	6.32609e-12
I_{02} (A)		1.47355e-07